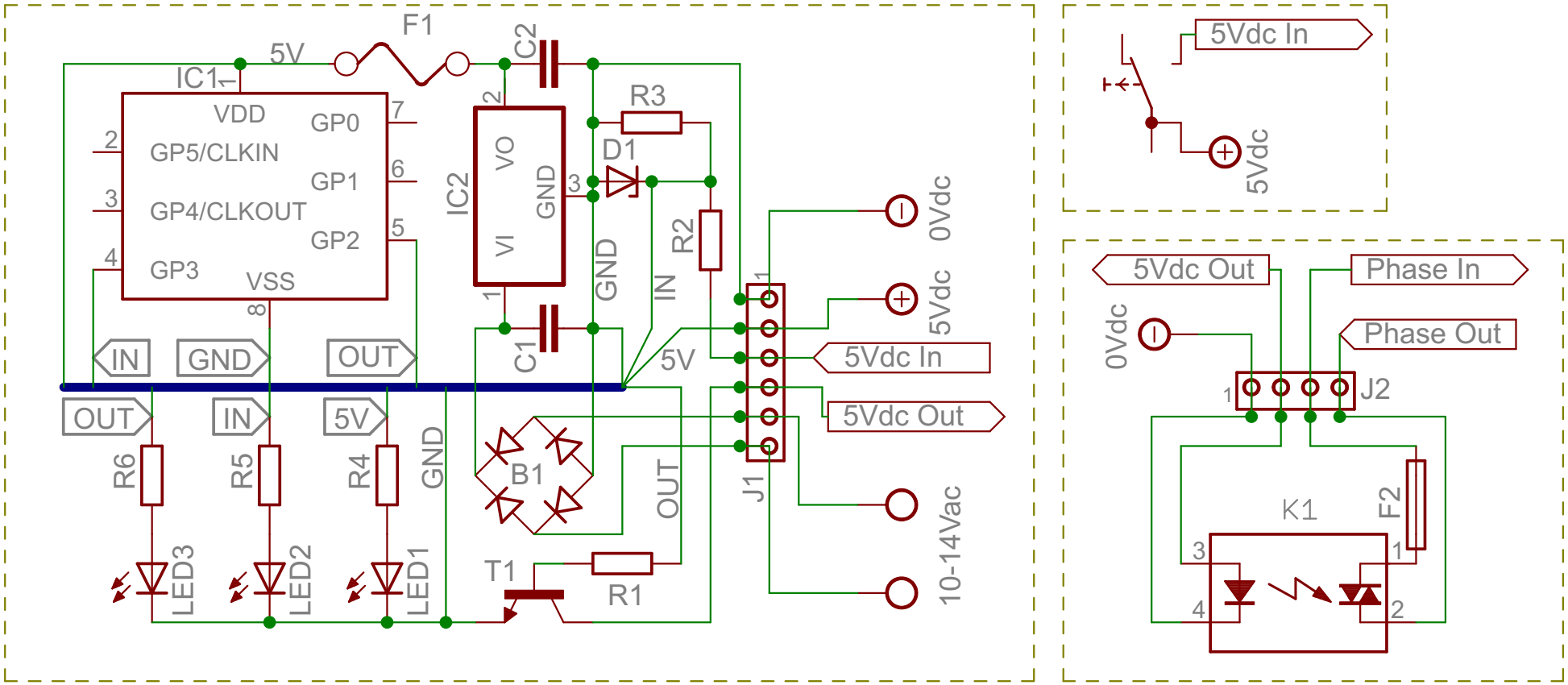
F1
5V
C2
IC1
VDD
GP0
GP5/CLKIN
GP1
GP4/CLKOUT
GP2
GP3
VSS
IC2
VO
VI
GND
R3
D1
R2
GND
IN
C1
5V
IN
GND
OUT
OUT
IN
5V
R6
R5
R4
GND
LED3
LED2
LED1
B1
T1
R1
OUT
J1
0Vdc
5Vdc
5Vdc In
5Vdc Out
10-14Vac
5Vdc In
5Vdc
5Vdc Out
Phase In
0Vdc
Phase Out
J2
K1
F2